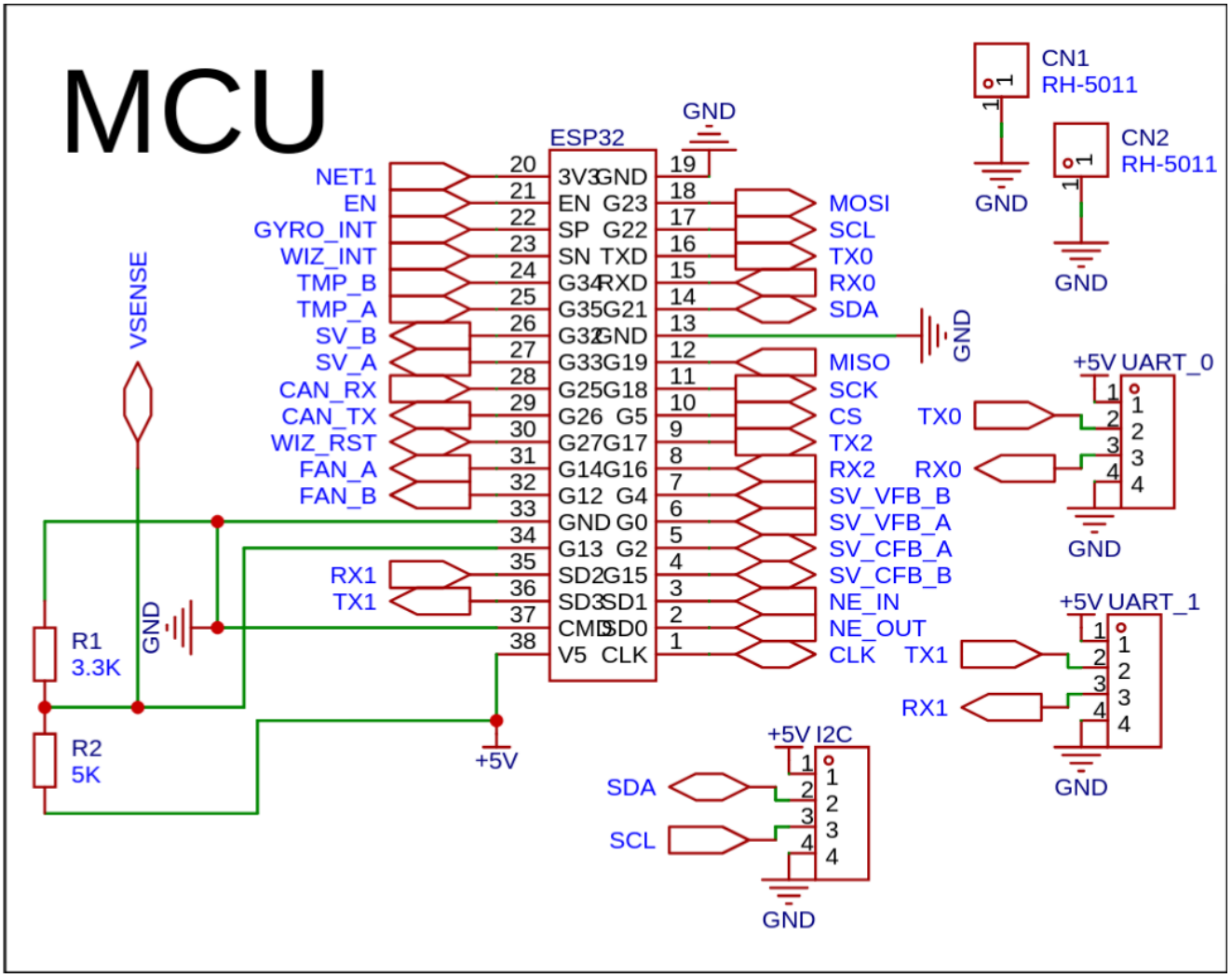

Connection	Pin name	GPIO	Mode	Notes
3V	3V3	-	-	Power 3.3V
EN	EN	-	-	Chip enable
GYRO_INT	VP	36	INPUT	Input only
WIZ_INT	VN	39	INPUT	Input only
TMP_B	D34	34	INPUT	Input only
TMP_A	D35	35	INPUT	Input only
SV_B	D32	32	OUTPUT	
SV_A	D33	33	OUTPUT	
CAN_RX	D25	25	INPUT	
CAN_TX	D26	26	OUTPUT	
WIZ_RST	D27	27	OUTPUT	
FAN_A	D14	14	OUTPUT	
FAN_B	D12	12	OUTPUT	
GND	GND	-	-	Ground

Connection	Pin name	GPIO	Mode	Notes
VSENSE	D13	13	?	
RX1	SD2	9	INPUT	
TX1	SD3	10	OUTPUT	
GND?	CMD	11	-	
5V	VIN	-	-	Power 5V
CLK	CLK	6	-	
NE_OUT	SD0	7	INPUT	
NE_IN	SD1	8	INPUT	
SV_CFB_B	D15	15	INPUT	
SV_CFB_A	D2	2	INPUT	
SV_VFB_A	D0	0	INPUT	
SV_VFB_B	D4	4	INPUT	
RX2	RX2/D16	16	INPUT	
TX2	TX2/D17	17	OUTPUT	
CS	D5	5	OUTPUT	
SCK	D18	18	OUTPUT	
MISO	D19	19	INPUT	
GND	GND	-	-	Ground
SDA	SDA/D21	21		Wire.h
RX0	RX	3	INPUT	
TX0	TX	1	OUTPUT	
SCL	SCL/D22	22	OUTPUT	Wire.h
MOSI	D23	23	OUTPUT	
GND	GND	-	-	Ground